YEAR 12 *Trial Exam Paper*

2023

SPECIALIST MATHEMATICS

Written examination 2

Reading time: 15 minutes

Writing time: 2 hours

STUDENT NAME:

QUESTION AND ANSWER BOOK

Structure of book

Section	*Number of questions*	*Number of questions to be answered*	*Number of marks*
A	20	20	20
B	6	6	60
			Total 80

- Students are permitted to bring into the examination room: pens, pencils, highlighters, erasers, sharpeners, rulers, a protractor, set squares, aids for curve sketching, one bound reference, one approved technology (calculator or software) and, if desired, one scientific calculator. Calculator memory DOES NOT need to be cleared. For approved computer-based CAS, full functionality may be used.
- Students are NOT permitted to bring into the examination room: blank sheets of paper and/or correction fluid/tape.

Materials supplied

- Question and answer book of 31 pages
- Formula sheet
- Answer sheet for multiple-choice questions

Instructions

- Write your **name** in the box provided above on this page, and on your answer sheet for multiple-choice questions.
- Unless otherwise indicated, the diagrams in this book are **not** drawn to scale.
- All written responses must be in English.

At the end of the examination

- Place the answer sheet for multiple-choice questions inside the front cover of this book.
- You may keep the formula sheet.

Students are NOT permitted to bring mobile phones and/or any other unauthorised electronic devices into the examination room.

This trial examination produced by Insight Publications is NOT an official VCAA paper for the 2023 Specialist Mathematics written examination 2. The Publishers assume no legal liability for the opinions, ideas or statements contained in this trial examination. This examination paper is licensed to be printed, photocopied or placed on the school intranet and used only within the confines of the purchasing school for examining their students. No trial examination or part thereof may be issued or passed on to any other party, including other schools, practising or non-practising teachers, tutors, parents, websites or publishing agencies, without the written consent of Insight Publications.

Copyright © Insight Publications 2023

SECTION A – Multiple-choice questions

Instructions for Section A

Answer **all** questions in pencil on the answer sheet provided for multiple-choice questions.

Choose the response that is **correct** for the question.

A correct answer scores 1; an incorrect answer scores 0.

Marks will **not** be deducted for incorrect answers.

No marks will be given if more than one answer is completed for any question.

Unless otherwise indicated, the diagrams in this book are **not** drawn to scale.

Take the **acceleration due to gravity** to have magnitude g m s^{-2}, where $g = 9.8$

Question 1

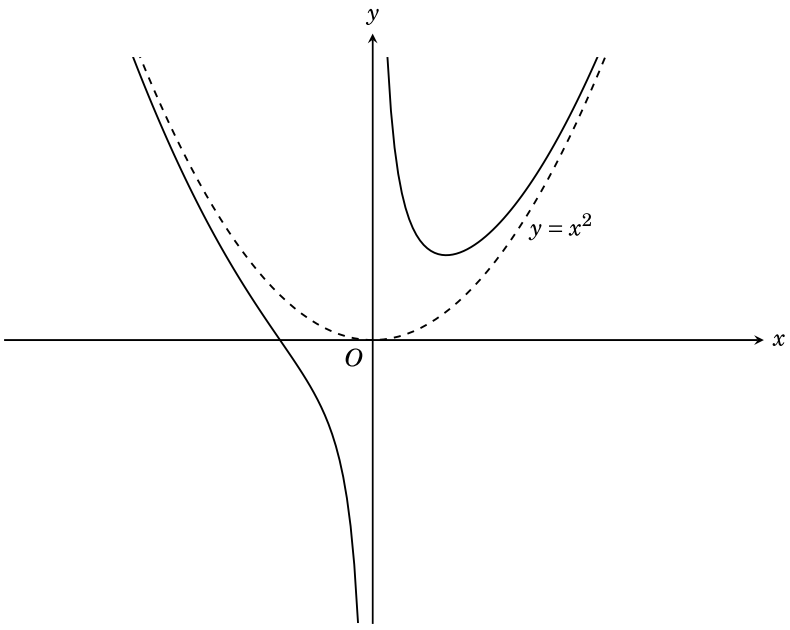

Let a be a positive real constant. A possible equation for the graph of the curve shown above is

A. $y = \dfrac{x^3 + a}{x}$

B. $y = \dfrac{x^3 - a}{x}$

C. $y = \dfrac{x^2 + a}{x}$

D. $y = \dfrac{x^2 - a}{x}$

E. $y = \dfrac{x^4 + a}{x}$

Copyright © Insight Publications 2023

Question 2

The implied domain and range of $f(x) = \arccos\left(\frac{|x-1|}{2}\right)$ are, respectively,

A. $[-1,\ 3]$ and $[0,\ \pi]$

B. $[-1,\ 3]$ and $\left[0,\ \frac{\pi}{2}\right]$

C. $(-1,\ 3)$ and $\left(0,\ \frac{\pi}{2}\right)$

D. $[-2,\ 2]$ and $\left[0,\ \frac{\pi}{2}\right]$

E. $[-2,\ 2]$ and $[0,\ \pi]$

Question 3

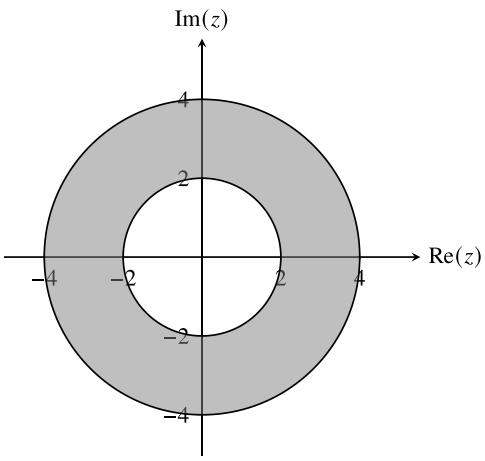

Given that $z \in C$, the shaded region (with boundaries included) is best described by

A. $\{z\colon (|z| \le 4) - (|z| \le 2)\}$

B. $\{z\colon 2 \le |z|^2 \le 4\}$

C. $\{z\colon 4 \le |z| \le 16\}$

D. $\{z\colon 4 \le z\,\bar{z} \le 16\}$

E. $\{z\colon 2 \le z\,\bar{z} \le 4\}$

Copyright © Insight Publications 2023

Question 4

$(z-1+3i)$ is a linear factor of $p(z)=z^3+az^2+bz+30$, where $a,b\in R$.

The ratio $\frac{a}{b}$ is

A. $\frac{1}{5}$

B. $\frac{1}{4}$

C. 4

D. 3

E. $\frac{1}{3}$

Question 5

If $\text{Arg}(a-i)=-\frac{5\pi}{6}$, then the real number a is equal to

A. $\sqrt{3}$

B. $-\sqrt{3}$

C. $-\frac{1}{\sqrt{3}}$

D. $\frac{\sqrt{3}}{2}$

E. $-\frac{\sqrt{3}}{2}$

Copyright © Insight Publications 2023

Question 6

With a suitable substitution, $\int_0^{\frac{\pi}{9}} \sin^3(3x)dx$ can be expressed as

A. $\int_{\frac{1}{2}}^{1} \left(1-u^2\right)du$

B. $3\int_{1}^{\frac{\sqrt{3}}{2}} \left(1-u^2\right)du$

C. $\frac{1}{3}\int_0^{\frac{\pi}{9}} \left(1-u^2\right)du$

D. $\frac{1}{3}\int_{\frac{1}{2}}^{1} \left(1-u^2\right)du$

E. $\frac{1}{3}\int_{1}^{\frac{1}{2}} \left(1-u^2\right)du$

Question 7

Water is draining from a cone-shaped funnel at the constant rate of $15\,\text{cm}^3\ \text{min}^{-1}$.

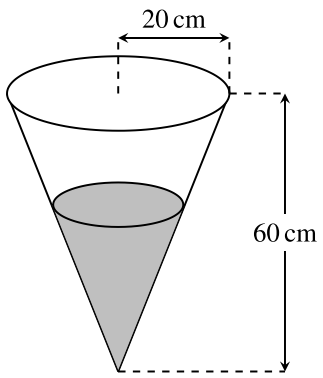

The funnel has a height of 60 cm and a base radius of 20 cm. Let h cm be the depth of the water in the funnel at time t min. The rate of **decrease** of h, in cm/min, is given by

A. $\frac{5\pi h^2}{3}$

B. $\frac{3\pi h^2}{5}$

C. $\frac{15\pi}{h}$

D. $\frac{45}{\pi h^2}$

E. $\frac{135}{\pi h^2}$

Copyright © Insight Publications 2023

Question 8

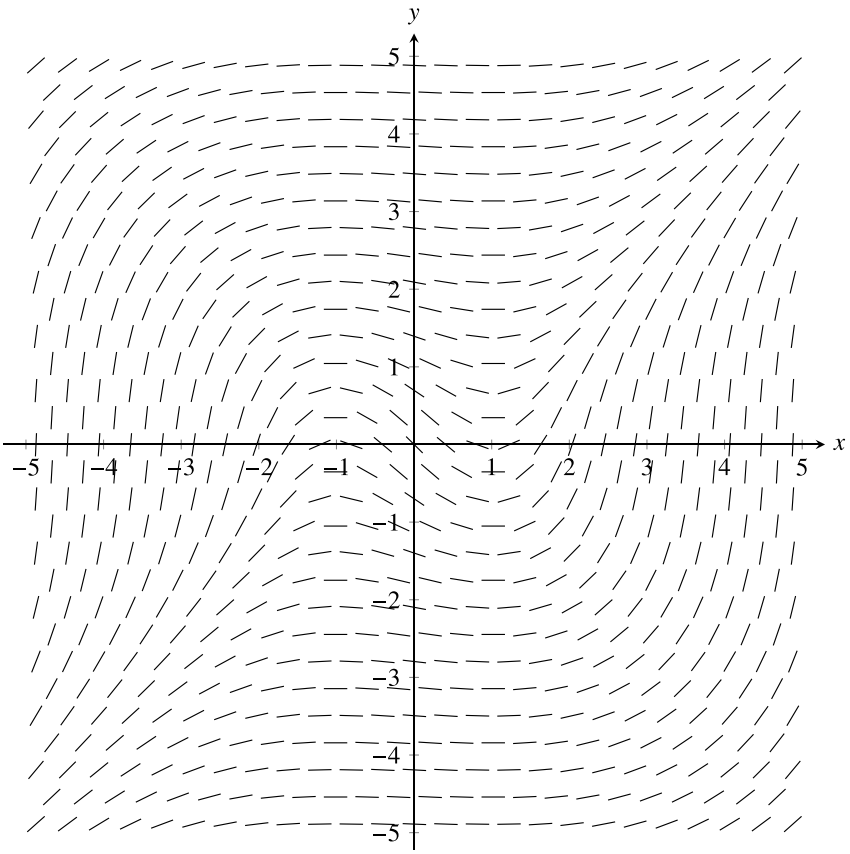

The direction field for a certain differential equation is shown above.

The solution curve to the differential equation that passes through the point (–2, 0) could also pass through the point

A. (2, 3.2)

B. (3, 2.3)

C. (4, 2.7)

D. (4, 1.4)

E. (5, 3.5)

Copyright © Insight Publications 2023

Question 9

The curve described by the parametric equations $x = 2t - 1$ and $y = \frac{1}{2}t^2 + t$ for $t \in [2,\ 4]$ is rotated about the y-axis to form a solid of revolution.

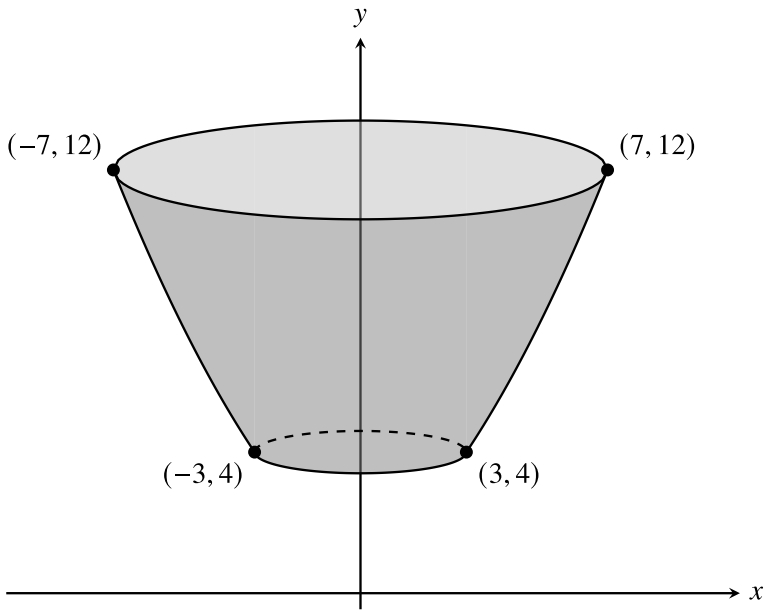

The area of the curved part of the surface is found by evaluating

A. $\int_4^{12} 2\pi\left(\frac{1}{2}t^2 + t\right)\sqrt{t^2 + 2t + 5}\,dt$

B. $\int_2^4 \sqrt{t^2 + 2t + 5}\,dt$

C. $\int_2^4 2\pi\left(\frac{1}{2}t^2 + t\right)\sqrt{t^2 + 2t + 1}\,dt$

D. $\int_2^4 2\pi\left(\frac{1}{2}t^2 + t\right)\sqrt{t^2 + 2t + 5}\,dt$

E. $\int_2^4 2\pi(2t - 1)\sqrt{t^2 + 2t + 5}\,dt$

Copyright © Insight Publications 2023

Use the points $A(3,\ 1,\ 1)$, $B(1,\ -2,\ 3)$ *and* $C(4,\ 1,\ -2)$ *to answer questions 10 and 11.*

Question 10

The equation of the plane that passes through points $A(3,\ 1,\ 1)$, $B(1,\ -2,\ 3)$ and $C(4,\ 1,\ -2)$ is

A. $3x - y + z = 9$

B. $3x - 4y + 3z = 8$

C. $9x - 4y + 3z = 26$

D. $3x - 4y + 3z = 20$

E. $9x + 4y - 3z = 16$

Question 11

The area of the triangle *ABC*, with vertices $A(3,\ 1,\ 1)$, $B(1,\ -2,\ 3)$ and $C(4,\ 1,\ -2)$, is equal to

A. 106

B. $\dfrac{\sqrt{106}}{2}$

C. $\dfrac{53}{2}$

D. $\dfrac{\sqrt{53}}{2}$

E. $\dfrac{\sqrt{106}}{4}$

Copyright © Insight Publications 2023

Question 12

The line of intersection of the planes

$\Pi_1: \quad 5x - y + 2z = 6$

$\Pi_2: \quad 2x + 3y + z = -4$

is parallel to the vector

A. $5\underset{\sim}{i} - \underset{\sim}{j} + 2\underset{\sim}{k}$

B. $2\underset{\sim}{i} + 3\underset{\sim}{j} + \underset{\sim}{k}$

C. $7\underset{\sim}{i} + \underset{\sim}{j} - 17\underset{\sim}{k}$

D. $7\underset{\sim}{i} - \underset{\sim}{j} + 17\underset{\sim}{k}$

E. $7\underset{\sim}{i} + \underset{\sim}{j} + 17\underset{\sim}{k}$

Question 13

Let $O(n)$ be the sum of the first n odd numbers:

$O(1) = 1,\ O(2) = 1 + 3,\ O(3) = 1 + 3 + 5,\ \ldots$

Which one of the following gives a proof of the statement '$O(n) = n^2$ for $n = 1,\ 2,\ 3,\ \ldots$' using mathematical induction?

A. Show that $O(1) = 1$, assume that $O(n) = n^2$ and deduce that $O(n+1) = (n+1)^2$.

B. Show that $O(1) = 1$, assume that $O(n) = 1 + 3 + 5 + \ldots + (2n-1)$ and deduce that $O(n+1) = 1 + 3 + 5 + \ldots + (2n)$.

C. Show that $O(1) = 1$, assume that $O(n) = 1 + 3 + 5 + \ldots + (2n-1)$ and deduce that $O(n+2) = 1 + 3 + 5 + \ldots + (2n+1)$.

D. Show that $O(1) = 1$, assume that $O(n) = n^2$ and deduce that $O(n+2) = (n+1)^2$.

E. Show that $O(n+1) = O(n) + 2n - 1$.

Copyright © Insight Publications 2023

Question 14

The procedure below has been written in pseudocode.

```
i=0
While i<50
      print i
      i=3i+1
End While
```

How many digits are printed?

A. 4

B. 5

C. 6

D. 7

E. 8

Question 15

Euler's method, with a step size of *h*, is used to find an approximation to the differential equation $\frac{dy}{dx} = x(1+y)$, where $y(1) = 1$. The value of y_2 is

A. $1+4h+4h^2+2h^3$

B. $1+2h+2h^2+2h^3$

C. $1+2h+4h^2+2h^3$

D. $1+4h+4h^2+4h^3$

E. $1+4h+2h^2+2h^3$

Copyright © Insight Publications 2023

Question 16

If $\frac{dy}{dx} = \sqrt{\cos(x) + 3}$ and $y(1) = \sqrt{2}$, then the value of $y(3)$, correct to three decimal places, is

A. 6.714

B. 3.885

C. 5.300

D. 4.657

E. 1.828

Question 17

A particle travels in a straight line with velocity v and time t.

If the velocity of the particle is given by $v = \frac{1}{\sqrt{2 - x^2}}$ for $0 < x < \sqrt{2}$, then the acceleration of the particle is given by

A. $\frac{x}{\left(2 - x^2\right)^{\frac{3}{2}}}$

B. $\arcsin\left(\frac{x}{\sqrt{2}}\right)$

C. $\frac{1}{\left(2 - x^2\right)^{\frac{3}{2}}}$

D. $\frac{2x}{\left(2 - x^2\right)^{2}}$

E. $\frac{x}{\left(2 - x^2\right)^{2}}$

Copyright © Insight Publications 2023

Question 18

The velocity–time graph below shows the motion of a body travelling in a straight line, where v m s^{-1} is its velocity after t seconds.

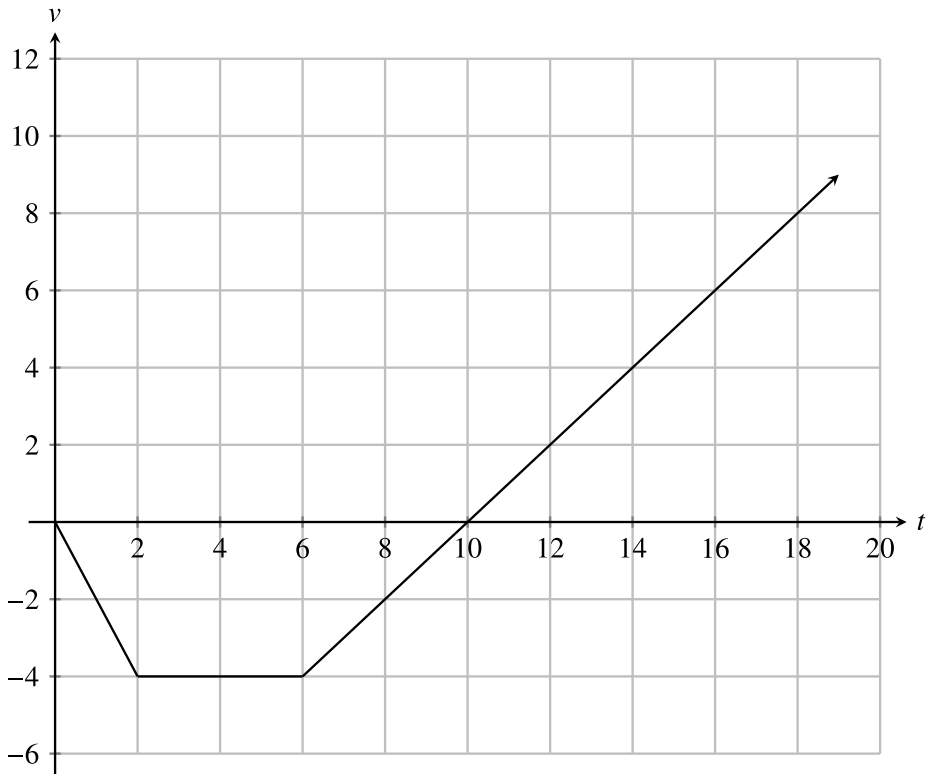

Given that the particle starts at rest when $t = 0$, the particle next passes the starting point when t is between

A. 15 and 16 seconds

B. 16 and 17 seconds

C. 17 and 18 seconds

D. 18 and 19 seconds

E. 19 and 20 seconds

Copyright © Insight Publications 2023

Question 19

X and Y are normally distributed random variables with mean 5 and 4, respectively.
X and Y have the same standard deviation, σ. Suppose $W = 4X - 3Y$.

If $\Pr(W < 10.5) = \Pr(Z < 2)$, where Z is the standard normal, then σ is equal to

A. $\frac{1}{20}$

B. $\frac{1}{10}$

C. $\frac{1}{5}$

D. $\frac{1}{4}$

E. $\frac{1}{2}$

Question 20

The mass of apples is normally distributed, with a mean of 120 g and a standard deviation of 6 g.

The probability that a random sample of 10 apples has an average mass of less than 118 g is closest to

A. 0.1459

B. 0.3694

C. 0.1151

D. 0.4207

E. 0.0004

END OF SECTION A
TURN OVER

Copyright © Insight Publications 2023

SECTION B

Instructions for Section B

Answer **all** questions in the spaces provided.

Unless otherwise specified, an **exact** answer is required to a question.

In questions where more than one mark is available, appropriate working **must** be shown.

Unless otherwise indicated, the diagrams in this book are **not** drawn to scale.

Take the **acceleration due to gravity** to have magnitude g m s^{-2}, where $g = 9.8$.

Question 1 (11 marks)

Let $f: [0,\ 4] \to R$, $f(x) = 1 + \dfrac{4\sqrt{x}}{x^2+1}$.

a. **i.** Express $f'(x)$ in the form $\dfrac{ax^2+b}{\sqrt{x}\left(1+x^2\right)^2}$, where a and b are real constants.

1 mark

ii. Hence, write down the coordinates of the stationary point on the graph of f.

1 mark

Copyright © Insight Publications 2023

b. **i.** Find a polynomial equation which, when solved, will give the x value of the point of inflection on the graph of f.

1 mark

ii. Hence, find the coordinates of the point of inflection on the graph of f.
Give your answers correct to three decimal places.

1 mark

Copyright © Insight Publications 2023

c. Sketch the graph of f on the axes below.

Label the stationary point and end points with their coordinates.

Label the point of inflection with its coordinates, correct to three decimal places.

3 marks

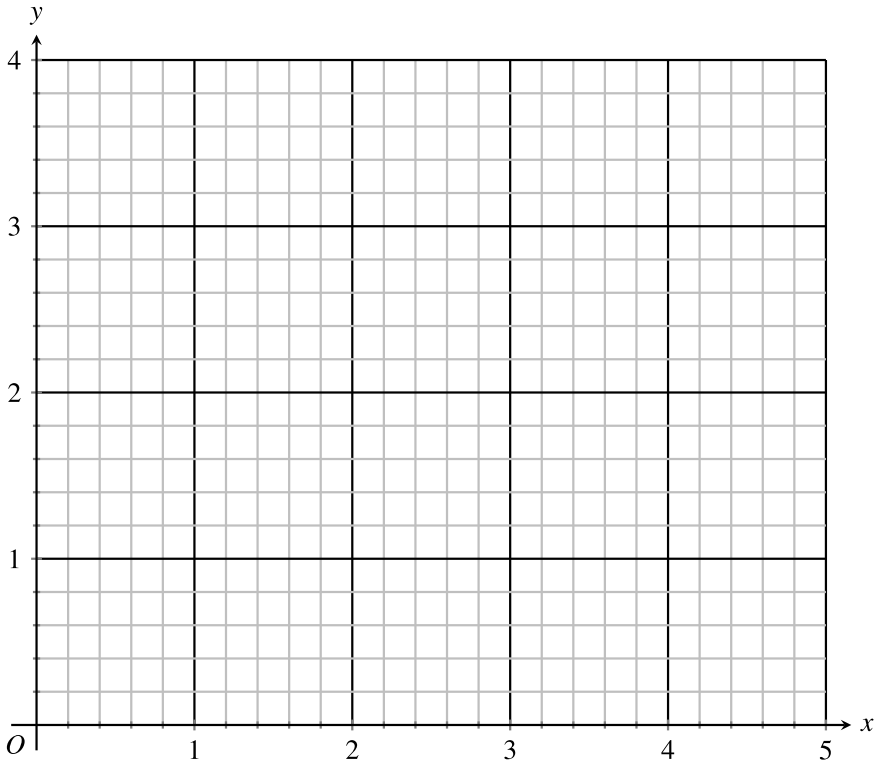

The graph of f is rotated about the x-axis between $x = 0$ and $x = h$, where $0 < h < 4$, to form a solid of revolution.

d. **i.** Write down an equation involving an integral in terms of x which, when evaluated, will give the value of h when the volume is 50 cubic units.

1 mark

ii. Hence find the value of h, correct to two decimal places

1 mark

Copyright © Insight Publications 2023

e. The area of the curved part of a solid of revolution between $x = 0$ and $x = h$ is found by evaluating $\int_0^h 2\pi\left(\frac{4\sqrt{x}}{1+x^2}+1\right)\sqrt{\frac{m\left(3x^2-1\right)^2+nx\left(x^2+1\right)^4}{x\left(1+x^2\right)^4}}\,dx$,

where m and n are integers. Find the values of m and n.

2 marks

Copyright © Insight Publications 2023

Question 2 (9 marks)

a. Show algebraically that the set of points in the complex plane that satisfy the relation $|z-2i| = |z+\sqrt{3}-3i|$ lie on the line $y = \sqrt{3}x + 4$.

2 marks

b. Write down the Cartesian equation of the set of points which satisfies the relation $|z-2i| = 2$.

1 mark

Copyright © Insight Publications 2023

c. On the Argand diagram below, sketch the set of points which satisfy

i. $|z-2i| = |z+\sqrt{3}-3i|$

ii. $|z-2i| = 2$

Label any points of intersection of the two sets with their coordinates.

3 marks

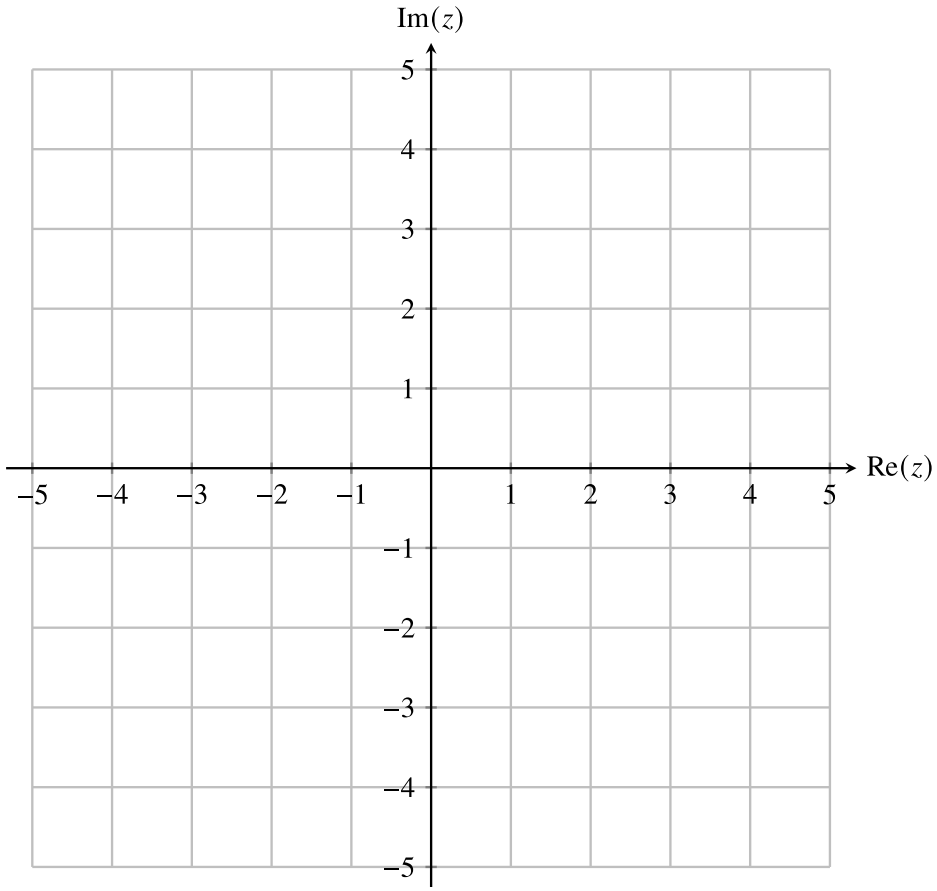

Let $S = \{z\colon\ |z-2i| \le 2\}$ and $T = \{z\colon\ |z-2i| \ge |z+\sqrt{3}-3i|\}$.

d. On the Argand diagram given in **part c.**, shade the region represented by $S \cap T$.

1 mark

e. Determine the area of the region $S \cap T$. Give your answer in the form $\dfrac{a\pi - b\sqrt{c}}{d}$, where *a*, *b*, *c* and *d* are positive integers.

2 marks

Copyright © Insight Publications 2023

Question 3 (10 marks)

BASE jumping is the recreational sport of jumping from fixed objects using a parachute to descend safely to the ground. A BASE jumper drops from a bridge and free falls for 62.5 metres before opening their parachute.

a. Neglecting the effects of air resistance while in free fall, determine the speed of the BASE jumper, in metres per second, when the parachute was opened. Give your answer as an integer.

2 marks

Having descended 62.5 metres, the BASE jumper opens their parachute. Their motion is retarded by a variable force that produces a deceleration of $\frac{1}{16}gv^2$ m s^{-2}, where v m s^{-1} is their velocity at t seconds when the parachute opens and g is the magnitude of acceleration due to gravity.

b. Show that the motion of the BASE jumper t seconds after their parachute opens is modelled by the differential equation $\frac{dv}{dt} = -\frac{1}{16}g\left(v^2 - 16\right)$.

1 mark

c. Write down the terminal velocity of the BASE jumper while they are descending with their parachute open.

1 mark

Copyright © Insight Publications 2023

At the same time as the BASE jumper opens their parachute, a drone lifts off from the ground. The velocity–time graph of the drone is shown below.

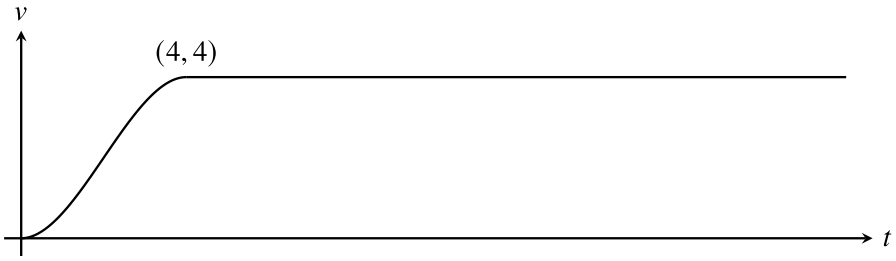

During the first four seconds of motion, the acceleration of the drone upwards is given by $a(t) = \frac{3}{8}\left(4t - t^2\right)$, after which the drone rises at a constant speed.

d. For $T > 4$, find an expression for the distance travelled by the drone T seconds after it lifts off from the ground. Give your answer in metres, in terms of T.

3 marks

Copyright © Insight Publications 2023

The velocity of the BASE jumper t seconds after their parachute opens is given by the expression $v(t) = \dfrac{4\left(39 + 31e^{-\frac{1}{2}gt}\right)}{39 - 31e^{-\frac{1}{2}gt}}$.

The drone and the BASE jumper are at the same height when the BASE jumper has fallen a total of 135 metres from the bridge.

e. Determine the height of the bridge. Give your answer in metres, correct to the nearest metre.

3 marks

Copyright © Insight Publications 2023

Question 4 (11 marks)

Line l_1 has the Cartesian equation $x-1=\dfrac{y+1}{6}=\dfrac{z-3}{-2}$.

Plane Π_1 contains l_1 and passes though point $P(3,\ 1,\ 5)$.

a. Find a Cartesian equation for Π_1 in the form $ax+by+cz=d$, where $a,\ b,\ c,\ d \in Z$.

3 marks

A second plane has the Cartesian equation $2x-y+3z=2$.

b. **i.** Show that the line l_2 of intersection of planes Π_1 and Π_2 is parallel to $7\underset{\sim}{i}+17\underset{\sim}{j}+\underset{\sim}{k}$.

1 mark

ii. Hence or otherwise, find a vector equation, in the form $\underset{\sim}{r}(t)=\underset{\sim}{a}+\underset{\sim}{b}t$ of the line l_2 of intersection of the planes Π_1 and Π_2.

2 marks

Copyright © Insight Publications 2023

c. Find the acute angle between the planes Π_1 and Π_2. Give your answer in degrees, correct to two decimal places.

2 marks

Line l_3 is perpendicular to plane Π_2 and passes through Π_2 at point $Q(4,\ 9,\ 1)$.

d. **i.** Write down the vector equation of line l_3.

1 mark

ii. Find the shortest distance between lines l_1 and l_3. Give your answer in the form $\sqrt{\frac{a}{b}}$, where a and b are integers.

2 marks

Copyright © Insight Publications 2023

Question 5 (11 marks)

In a town with a population of 5000 people, the rate of infection of a certain type of respiratory virus is modelled by the logistic differential equation $\frac{dN}{dt} = rN(5000 - N)$, where N is the number of people infected by the virus after t days.
The rate of infection is 250 people per day when the number of infected people is 2000.

a. Write down the value of r.

1 mark

b. Given that initially there are 50 people infected with the virus, use an integration technique and partial fractions to express N in terms of t.

3 marks

Copyright © Insight Publications 2023

c. After how many days will the number of people infected by the virus reach 1000? Give your answer in days, correct to two decimal places.

1 mark

d. **i**. When will the rate of increase of people with the virus be greatest? Give your answer in days, correct to two decimal places.

2 marks

ii. What is the greatest rate of increase in people with the virus? Give your answer in people per day, correct to the nearest person.

1 mark

Copyright © Insight Publications 2023

e. Sketch the graph of N versus t on the axes below.

Label the point of inflection and the starting point with their coordinates, and label any asymptotes with their equations. Give non-integer values, correct to two decimal places.

3 marks

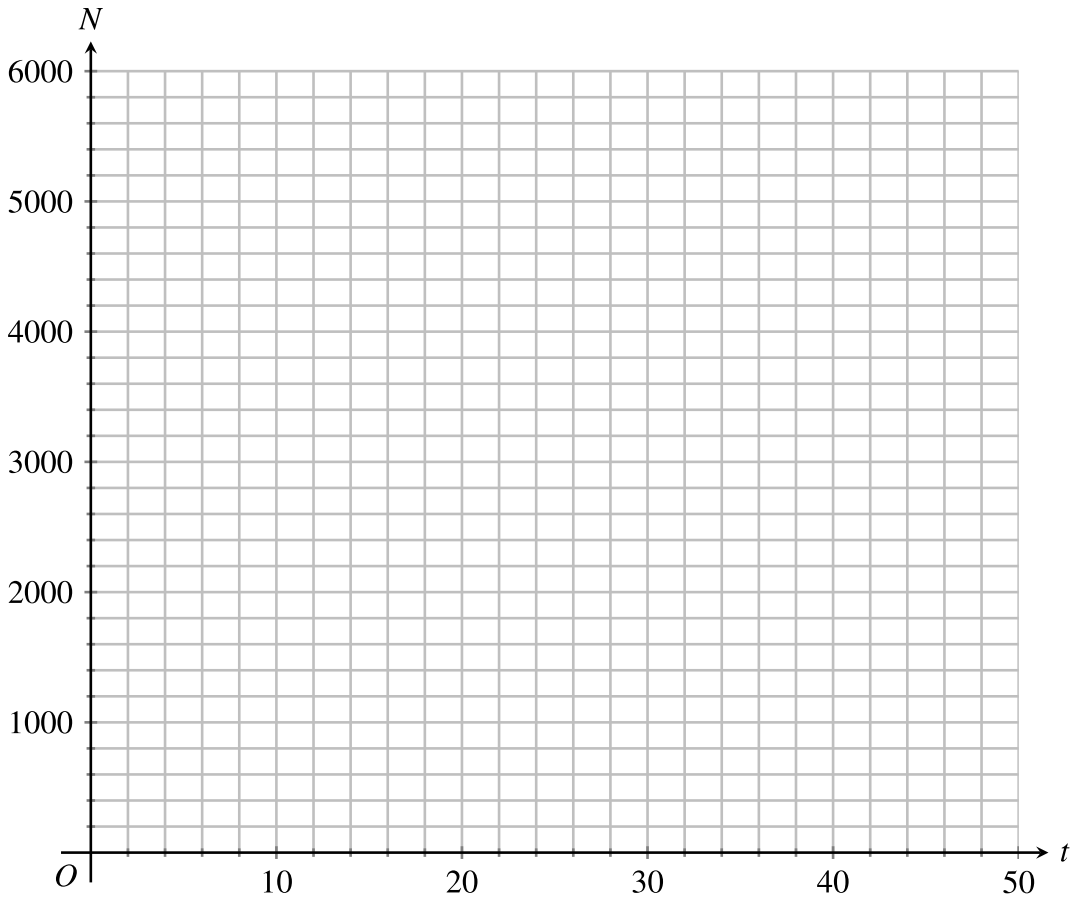

Copyright © Insight Publications 2023

Question 6 (8 marks)

A manufacturer produces boxes of biscuits. The mass of each box is normally distributed with a claimed mean of 400 grams and a known standard deviation of 6 grams.

To determine if the manufacturer's claim about the mean mass is true, a random sample of 20 boxes is made. The mean mass of the sample is found to be 397 grams.

A one-sided statistical test is to be carried out to determine if the sample mean of 397 grams differs significantly from the claimed population mean of 400 grams.

Let $\bar{X}$ denote the mean mass of a random sample of 20 boxes of biscuits.

a. Write down suitable hypotheses of H_0 and H_1 for the statistical test.

1 mark

b. Find the p value of the statistical test, correct to four decimal places.

1 mark

c. State, giving a reason, whether H_0 should be rejected at the 5% significance level.

1 mark

d. What is the smallest value of the sample mean mass that could be observed in order for H_0 **not** to be rejected. Give your answer in grams, correct to two decimal places.

2 marks

Copyright © Insight Publications 2023

It is subsequently discovered that the population mean mass is, in fact, 396 grams.
The standard deviation is unchanged at 6 grams.

The graph below represents the sampling distribution of the mean for samples of 20 boxes of biscuits where the population mean is 400 grams and the standard deviation is 6 grams.

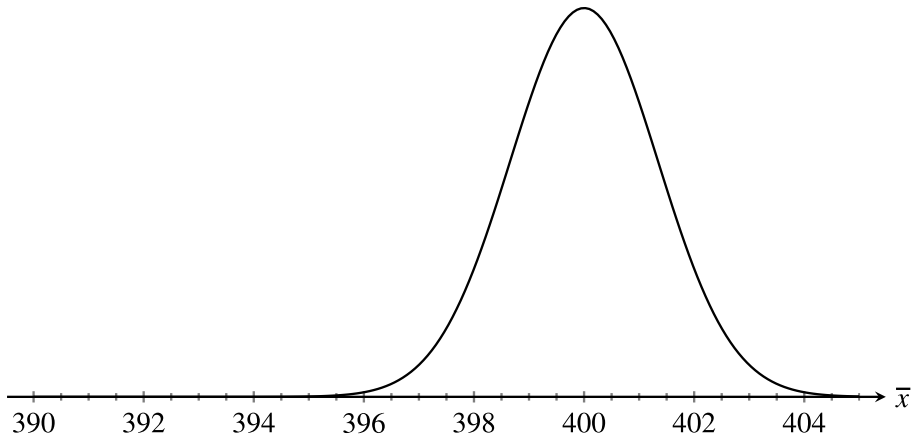

e. **i**. On the graph above, sketch the sample distribution if the population mean is 396 grams and the standard deviation is 6 grams.

1 mark

ii. Hence, on the graph above, shade the area that represents the probability of a Type II error being made when performing a one-sided test at the 5% significance level.

1 mark

iii. Find the probability of a Type II error being made. Give your answer correct to four decimal places.

1 mark

END OF QUESTION AND ANSWER BOOKLET

Copyright © Insight Publications 2023

THIS PAGE IS BLANK

Copyright © Insight Publications 2023

THIS PAGE IS BLANK

Copyright © Insight Publications 2023